The Biomass and Fossil Fuel Research Alliance (BF2RA) and its Project Portfolio

Peter Sage, BF2RA Technical Officer

14th Annual APGTF Workshop: "The Role of Fossil Fuel Power Plant in Providing Flexible Generation"

1VS Conference Centre, Westminster, London, 12th and 13th March 2014

Scope of Presentation

- Background to BF2RA
- Overview of Project Portfolio
- 2014 Open Call for Proposals
- Information and Progress on Selected Projects
- BF2RA website

BF2RA – What is it?

- BF2RA was formed in late 2009. It is a not for profit company that is limited by guarantee
- Membership is open to both the private and public sector
- Members currently include those from the electricity supply industry, equipment manufacture, fuel user and research sectors
- The objectives of BF2RA are to promote research into issues related to biomass and fossil fuels
- BF2RA also organises the annual Coal Science Lecture

Comprises 7 “world class” energy, equipment supplier and coal utilisation companies

ALSTOM

BRITISH SUGAR

DOOSAN

Drax

EPRI ELECTRIC POWER RESEARCH INSTITUTE

EDF ENERGY

e·on

BF2RA's project portfolio

Thirteen research projects are currently underway:-

- Dynamic modelling and simulation of supercritical coal-fired power plant with CO2 capture ability - University of Hull
- Intelligent flame detection incorporating burner condition monitoring and on-line fuel tracking – University of Kent
- Impact of biomass torrefaction on combustion behaviour in co-firing – University of Nottingham
- Avoiding sintering of coal-fired shallow fluidised beds – University of Nottingham
- Milling and conveyance of biomass – University of Nottingham
- A new classification system for biomass and waste materials – University of Nottingham
- Modelling of power plant alloys – University of Nottingham
- Development of a novel feeding system for use with high pressure combustion and gasification systems – University of Sheffield

BF2RA's project portfolio - continued

- Novel Coatings for Biomass Firing – University of Cranfield
- Coated Ferritic Alloys – University of Nottingham
- Biomass Exacerbated Cyclic Oxidation of Steels in Steam – University of Birmingham
- Biomass Co-firing to Improve the Burn-out of Unreactive Coals in Pulverised Fuel Combustion – University of Nottingham
- Modelling Biomass Milling – University of Nottingham

The following project was completed late 2013:-

- Low Temperature Ignition of Biomass – University of Leeds

BF2RA 2014 Open Call for Proposals

Priority research themes and specific topics were identified BF2RA Members and also through a consultation process with industry and academe at the October 2013 CRF/BF2RA Research Seminar. Priority research themes for 2014 are:-

- Utilisation of fossil fuel and biomass
- Plant operation and control
- Materials development
- Advanced cycles/alterative processes for fossil fuel/biomass utilisation
- Control of emissions and products arising from fossil fuel and biomass utilisation

BF2RA Funding Model/Open Call Process

- Typically up to £40k per successful project with balance funding coming from academic institution, other third party and/or UK Research Council
- Typically fund 3-4 year PhD/EngD projects but can be shorter duration RA projects in well justified cases

Process flowsheet

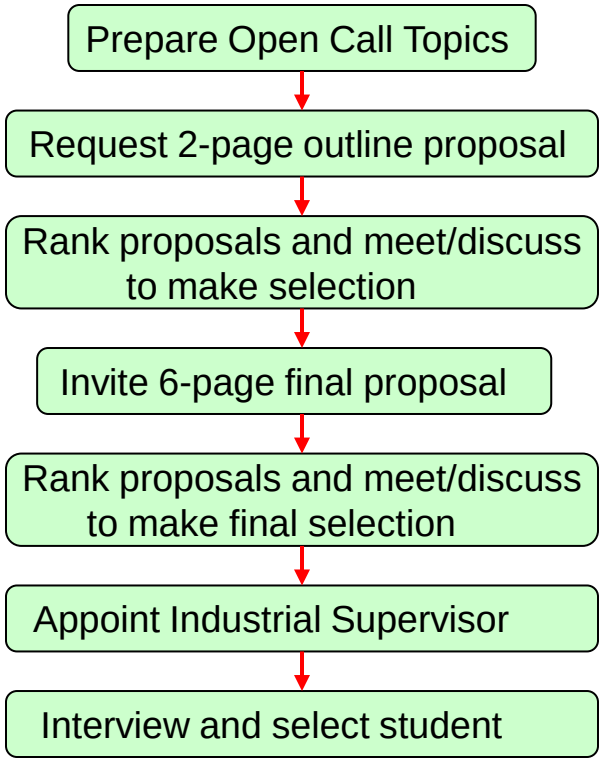

Total time for process~ 9 months

The University Of Sheffield.

BF2RA

High Pressure Feed System for Pressurised Gasification Processes

The overall objective of this research study is to develop a novel and reliable feeder for feeding solid fuels to high pressure gasifiers

PhD Student: James Craven
Supervisors: Professor Jim Swithenbank and Professor Vida Sharifi

Existing Technologies

Ideal characteristics

- High reliability
- Low operational cost
- Low power consumptio
- Continuous flow
- Versatile feedstock

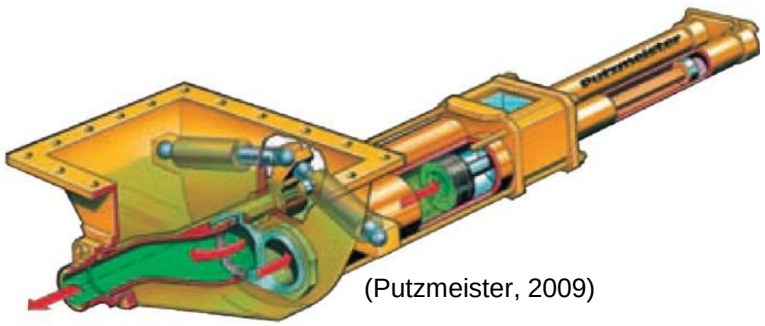

(Putzmeister, 2009)

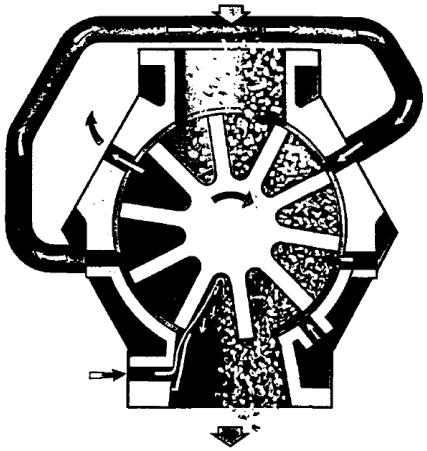

(Rautalin and Wilen, 1992)

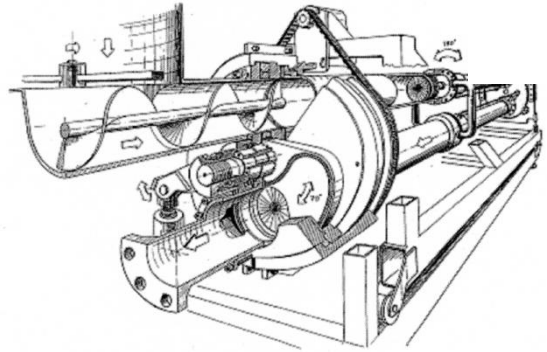

(Swanson et al., 2003)

Six main categories

- Rotary valves
- Lock hoppers
- Plug-forming feeders
- Piston-driven feeders
- Dynamic feeders
- Slurry feeders

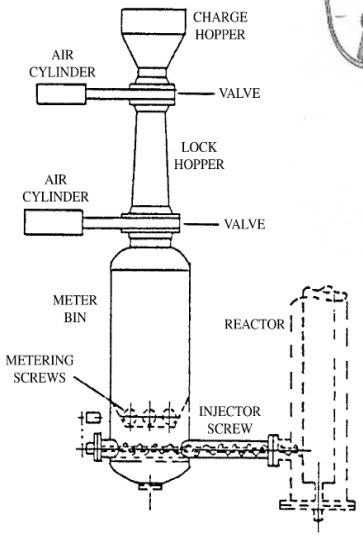

(Rautalin and Wilen, 1992)

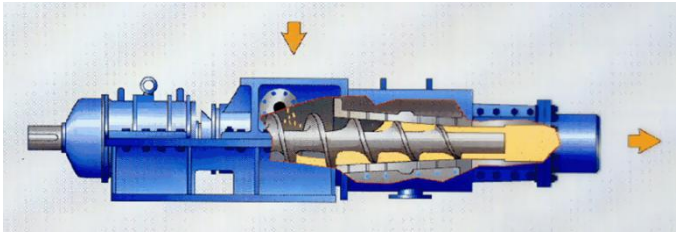

(Swanson et al., 2003)

Development of Novel Feeder for Pressurised Systems

Researcher: James Craven

Aim : develop a novel/ reliable feeder to continuously feed solid fuel into high pressure environments to enhance the commercial viability of high pressure gasifiers/ combustors

Modified Lock-Hopper System as design basis:

- Uses water as an incompressible fluid
- No use of inert gas for pressurising
- No syngas dilution with inert gas
- Mode 1: No net change in operating pressure- theoretical energy saving compared to a conventional lock hopper of 89% at 50 bar
- Mode 2: No waste of product syngas- theoretical energy saving compared to a conventional lock hopper of 81% at 50 bar

Lock HopperTest Rig

The University Of Sheffield.

The University Of Sheffield.

Main Conclusions

Hydraulic Lock Hopper has been run at pressures as high as **25 barg** in **two Modes** of operation

Successfully demonstrated the feeding of commercially available **wood pellets**

Achieved energy savings of **82% (Mode 1)** and **76% (Mode 2)** compared to a conventional lock hopper operating at 25 barg

Experimental results for both Mode 1 and Mode 2 **fit well with theoretical work**

Potential energy savings as high as **92% (Mode 1)** and **86% (Mode 2)** operating at 100 barg

Simple design and potential **retrofit to existing lock hoppers**

Papers and Prizes

Papers

Craven, J. M. et al, Hydrophobic Coatings for Moisture Stable Wood Pellets, Biomass and Bioenergy, In Review (2014).

Craven, J. M. et al Development of a Novel Solids Feed System for High Pressure Gasification, Fuel Processing Technology 119 (2014) 32-40.

Craven, J., Swithenbank, J. and Sharifi, V. (2013) High Pressure Feed System for Pressurised Biomass Gasification, Proceedings for the 2013 Bioenergy Exhibition and Conference, 4th-6th September, Jyväskylä, Finland, 205-212.

Craven, J. M., Swithenbank, J. and Sharifi, V. N. (2013) High Pressure Solids Feeder, Proceedings for the 21st European Biomass Conference and Exhibition, 3rd-7th June, Copenhagen, Denmark, 753-758.

Prizes

2013 SUPERGEN Bioenergy Hub Poster Competition Winner

2013 Energy Institute Foxwell Memorial Prize

Utilisation of Fossil Fuels and Biomass – Fuel Preparation & Transportation

Researcher: Orla Williams MEng CEng MCIBSE
enxow@nottingham.ac.uk

Academic Supervisors: Dr Carol Eastwick
Prof Ed Lester
Dr Donald Giddings
Industrial Supervisor: Mr Norman Byrne (EDF Energy plc)

EDF ENERGY

Project Remit

Extensive work conducted to understand coal comminution

Understanding of biomass comminution is more fractured and disparate.

Novelty: To rank and classify grinding, erosion and abrasion behaviour of biomass types to different mills.

Project Aims

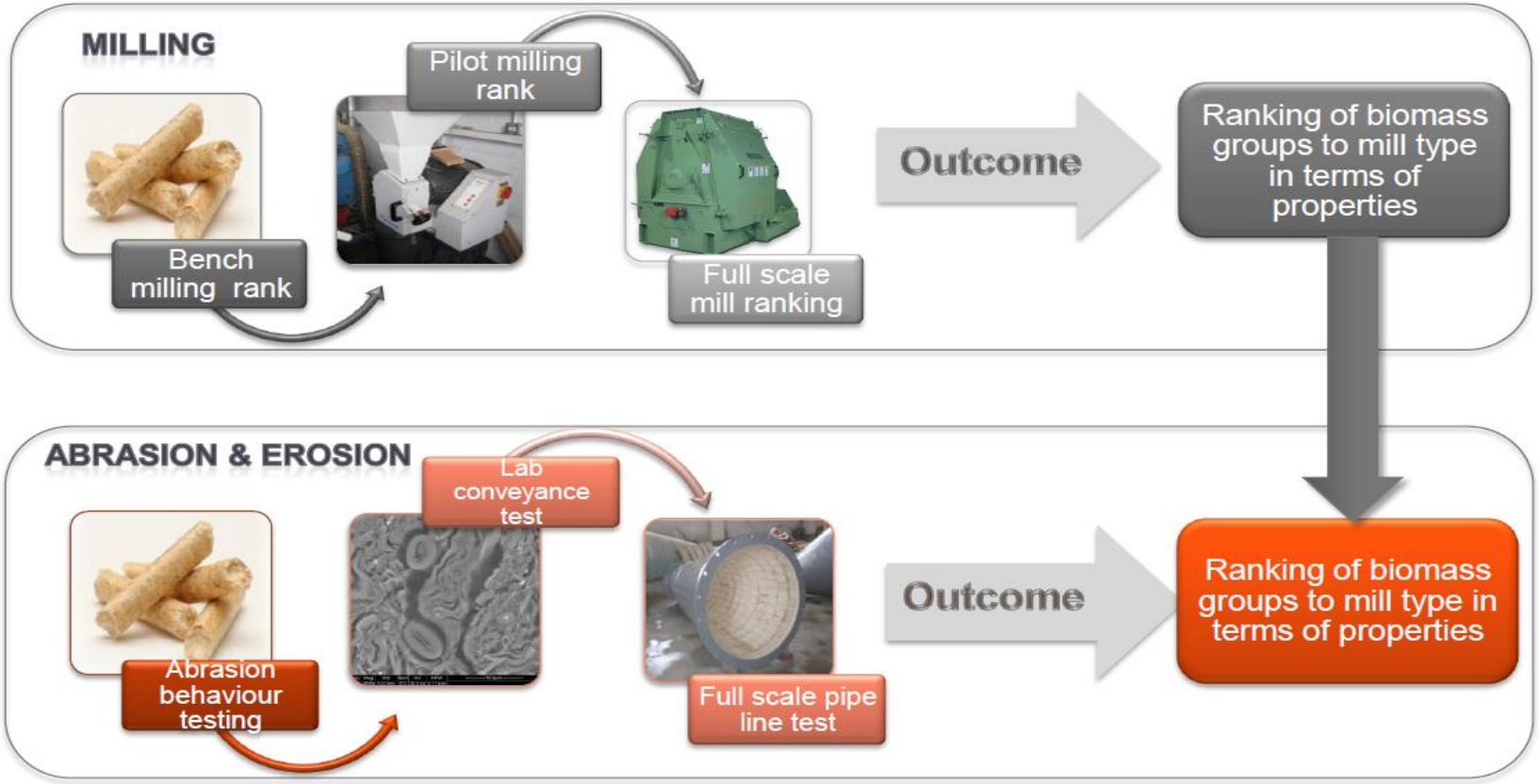

Research Outcomes to Date

Understanding the influencing factors in ball milling and hammer milling optimisation

Analysing the impact of moisture on milling behaviour

Impact of biomass type on energy consumption and particle size distributions in different mills

Greater understanding of the mechanical properties of biomasses and relating to milling behaviour

UNIVERSITY OF LEEDS

Low Temperature Ignition of Biomass

Jenny Jones, Alan Williams, Abby Saddawi

Ben Dooley, Eddie Mitchell, Joanna Werner, Steve Chilton

Low Temperature Ignition of Biomass - Introduction

Ignition risk is a significant hazard in the utilisation of biomass and is present in all aspects of its use:

- Processing
- Transporting
- Storage
- Milling
- Conveying
- Accumulation on hot surfaces
- Ignition sources (e.g. spark, static discharge)
- Dust explosions

In comparison to coal, biomass has higher volatile content and the volatiles evolve at lower temperature, presenting an increased ignition risk.

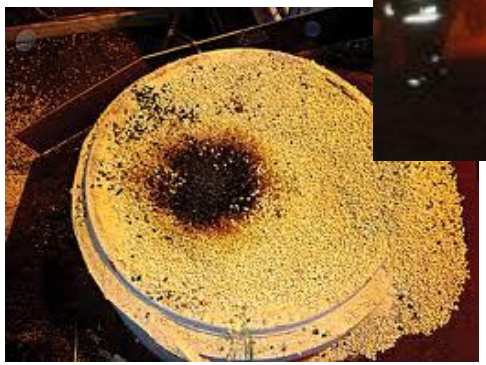

Low Temperature Ignition of Biomass - Aims of the study

- To develop laboratory-scale methods for assessing ignition risk.
- To characterise and measure the ignition properties and temperatures for a range of relevant biomass fuels.
- The data will be used to categorize the biomass in terms of its ignition risk in both storage and conveying

Approaches Used

- **Ignition of dust layers** – determine minimum temperature at which ignition occurs within 30 minutes
- **Thermal analysis methods** – determine temperature for onset of combustion (de-volatilisation), the temperature for maximum combustion rate, temperature at which process becomes exothermic and rates of pyrolysis
- **FTIR and pyrolysis GC-MS** – identification of low temperature volatiles, release of oily material at low temperature and volatile composition during pyrolysis/ lower flammability limit of volatile mixture
- **Single particle ignition** – measure minimum surface temperature for ignition, ignition delay time and combustion characteristics
- **BS method for dust accumulations** – different volumes/areas of fuel are tested for critical temperature for self-ignition and combustion induction time

Fuels

- **Olive cake**,
- Mesquite,
- Plane,
- **Pine heartwood**,
- Sunflower husk
- Red berry juniper
- **Miscanthus**

- Moisture contents in the range 4.7-7.4 % (a.r.)
- Ash contents vary from 2.1% (pine) to 11% (olive cake)
- HHV: 19-22 MJ/Kg.

Risk ranking

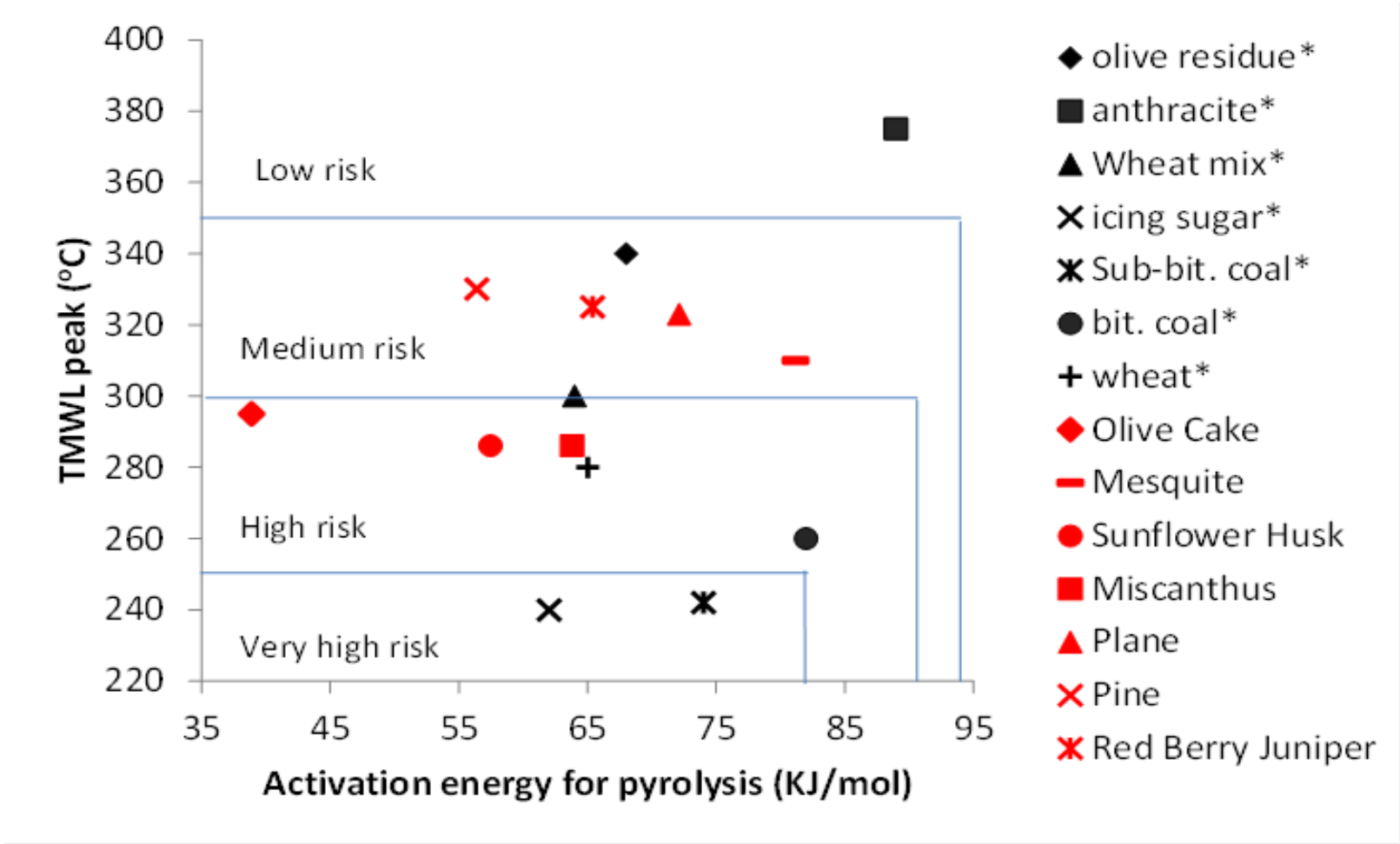

- *Adapted from Ramirez (J. Hazardous Materials)*

Low Temperature Ignition of Biomass - Conclusions

- A novel, single particle, method has been developed for assessing ignition delay and probability of ignition.
- This, together with other rapid, laboratory-scale methods have been used to compare 7 fuels from the project partners.
- Risk ranking must include a global reaction rate parameter – preferably an activation energy (since this will dictate the rate at low temperature).
- Laboratory scale methods provide useful insight and parameters to enable the prediction of (comparative) ignition delay of fuels at slightly elevated temperatures.
- Methods for scaling up (e.g. basket tests) are needed for assessing ignition risk in storage of heaps, since other tests neglect the self-insulating.
- Further work is recommended to extend the data base, measure critical ignition temperatures, and characterise ignition delays in dust-layers at lower temperature.

BF2RA website

Members' Area – contents list

Published Documents

- BF2RA Project Meetings Schedule
- Grant Summary Information
- Minutes of BF2RA Members' Meetings
- BF2RA Progress Review (Technical Officer's Report to BF2RA Members)
- Project Documentation
- Call and Proposals Information
- Efficient Fossil Energy Technologies (EFET) EngD Centre

BF2RA website – example of detailed content

www.bf2ra.org/members/membersarea/projectdocumentation/..

Grant 04 - Nottingham University - Avoiding Sintering of Coal-fired Shallow Fluidised Beds

Grant 04 EngD Annual Report August 2013
Grant 04 Meeting Minutes July 2013
Grant 04 Presentation July 2013
Grant 04 3rd Progress Report June 2013
Grant 04 Meeting Minutes January 2013
Grant 04 Presentation January 2013
Grant 04 2nd Progress Report December 2012
Grant 04 1st Progress Report June 2012
Grant 04 Progress Meeting Minutes June 2012
Grant 04 Presentation June 2012
Grant 04 kick-off meeting 8 Nov 2011
Grant 04 EngD Project Plan Nov 2011
Grant 04 Daniel Afilaka Presentation 8 Nov 2011
Grant 04 Project Proposal

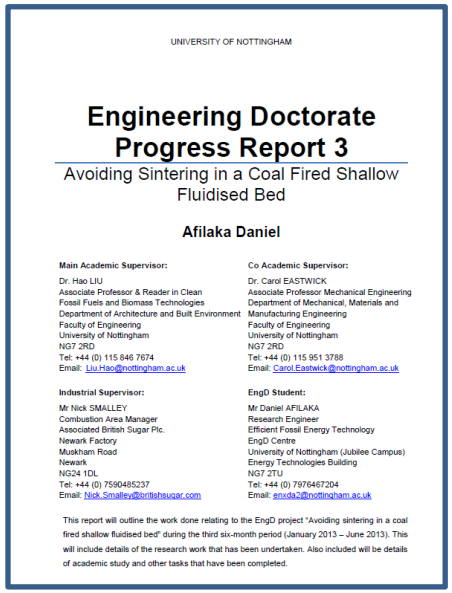

UNIVERSITY OF NOTTINGHAM

Engineering Doctorate Progress Report 3

Avoiding Sintering in a Coal Fired Shallow Fluidised Bed

Afilaka Daniel

Main Academic Supervisor:
Dr. Hao LIU
Associate Professor & Reader in Clean Fossil Fuels and Biomass Technologies
Department of Architecture and Built Environment
Faculty of Engineering
University of Nottingham
NG7 2RD
Tel: +44 (0) 115 846 7674
Email: Liu.Hao@nottingham.ac.uk

Co Academic Supervisor:
Dr. Carol EASTWICK
Associate Professor Mechanical Engineering
Department of Mechanical, Materials and Manufacturing Engineering
Faculty of Engineering
University of Nottingham
NG7 2RD
Tel: +44 (0) 115 951 3788
Email: Carol.Eastwick@nottingham.ac.uk

Industrial Supervisor:
Mr Nick SMALLEY
Combustion Area Manager
Associated British Sugar Plc.
Newark Factory
Muskham Road
Newark
NG24 1DL
Tel: +44 (0) 7590485237
Email: Nick.Smalley@britishsugar.com

EngD Student:
Mr Daniel AFILAKA
Research Engineer
Efficient Fossil Energy Technology
EngD Centre
University of Nottingham (Jubilee Campus)
Energy Technologies Building
NG7 2TU
Tel: +44 (0) 7976467204
Email: enxda2@nottingham.ac.uk

This report will outline the work done relating to the EngD project "Avoiding sintering in a coal fired shallow fluidised bed" during the third six-month period (January 2013 – June 2013). This will include details of the research work that has been undertaken. Also included will be details of academic study and other tasks that have been completed.

Avoiding the sintering of coal-fired shallow fluidised bed:
Third Project Review Meeting

Daniel Afilaka, EngD Research Engineer

Efficient Fossil Energy Technologies Centre.
University of Nottingham

Date: 19th of July, 2013

Main Academic Supervisor: Dr Hao Liu (University of Nottingham)
Co - Academic Supervisor: Dr Carol Eastwick (University of Nottingham)
Industrial Supervisor: Nick Smalley (British Sugar)

BF2RA Value to Members

- World class research with good funding leverage
  - 2.5m€ equivalent programme (at full economic cost) in 2013 increasing to 3m€ in 2014
- Full access to 6 monthly progress reports and final reports via ‘member only’ area of BF2RA web-site
- Full access to attend any project progress meeting
- Provide Industrial Supervisor for project of particular interest
- Shape the scope of the open call and detail of invited projects
- Member of the BF2RA ‘Club’
  - Better understanding of supplier/customer research interests
  - Collective view often better than the individual company view
- Select speaker for annual Coal Science Lecture (London)
  - Primarily funded with BCURA grant + sponsorships

For further information about BF2RA please:-

- visit: - www.bf2ra.org

or

- email: - technical@bf2ra.org

Thank you